DV 500 VT
Z.-Nr.:250031
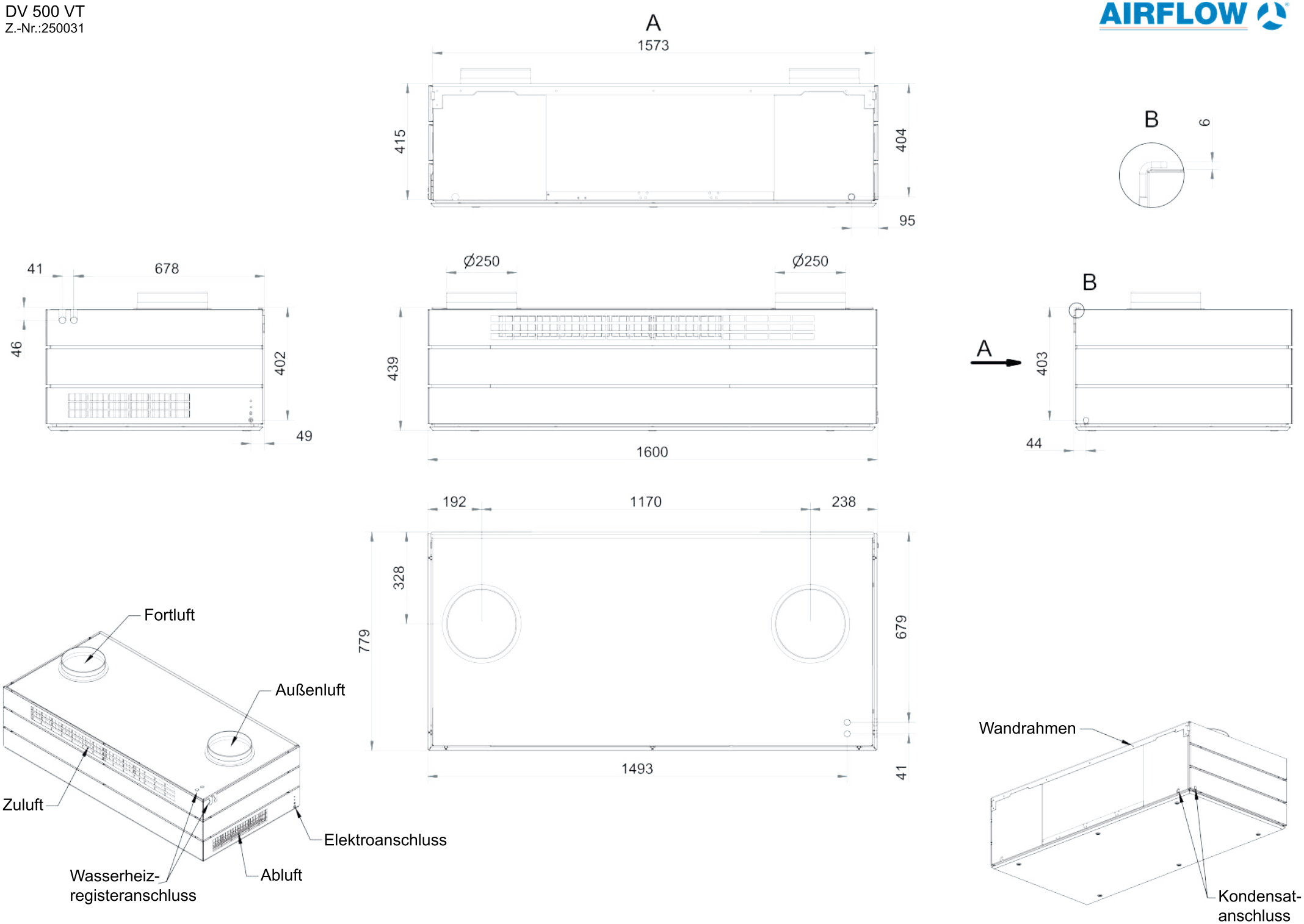
AIRFLOW