DV 300 SSDIB - CF
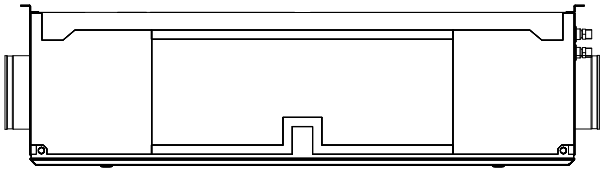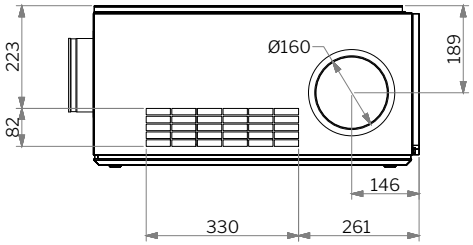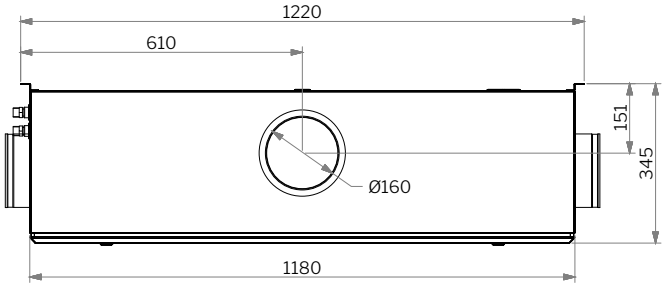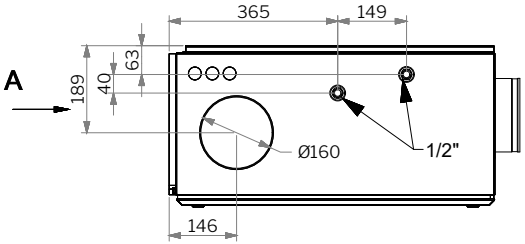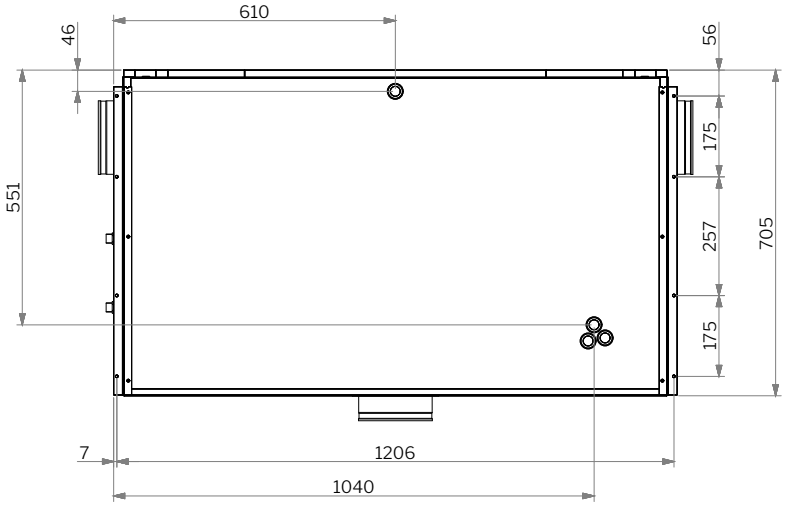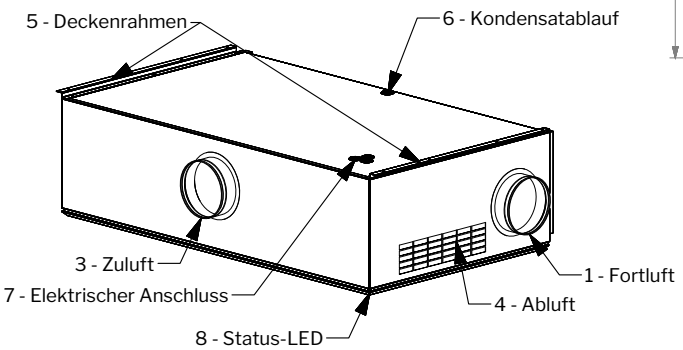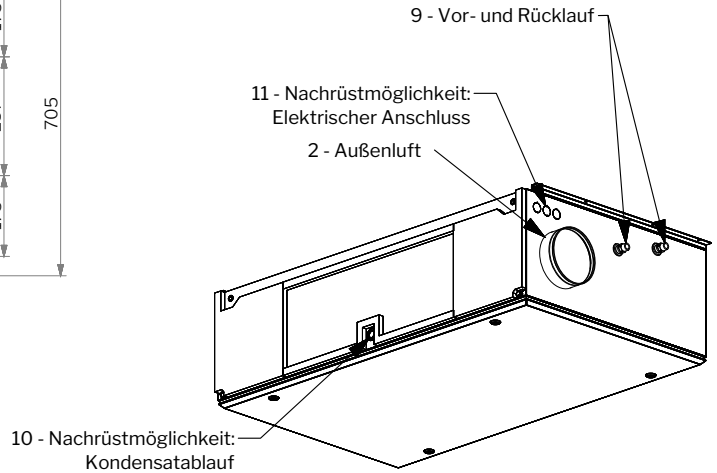
A