DV 300 SHDIDE - CF
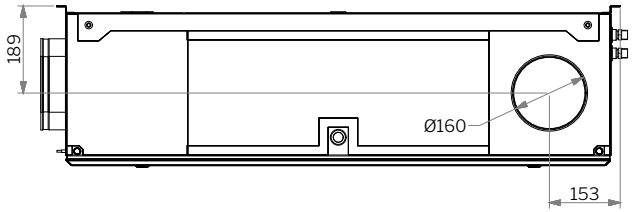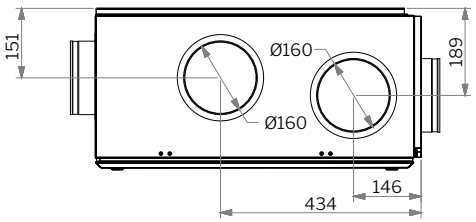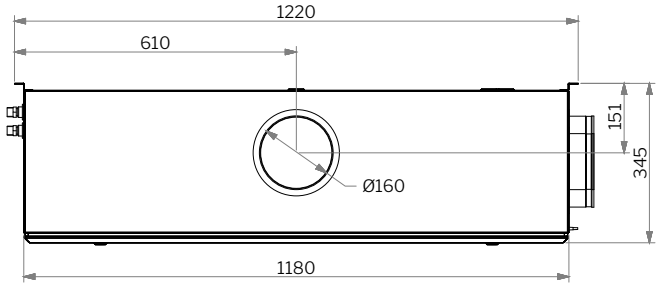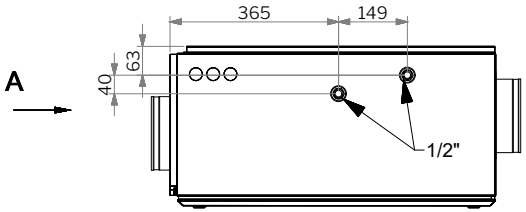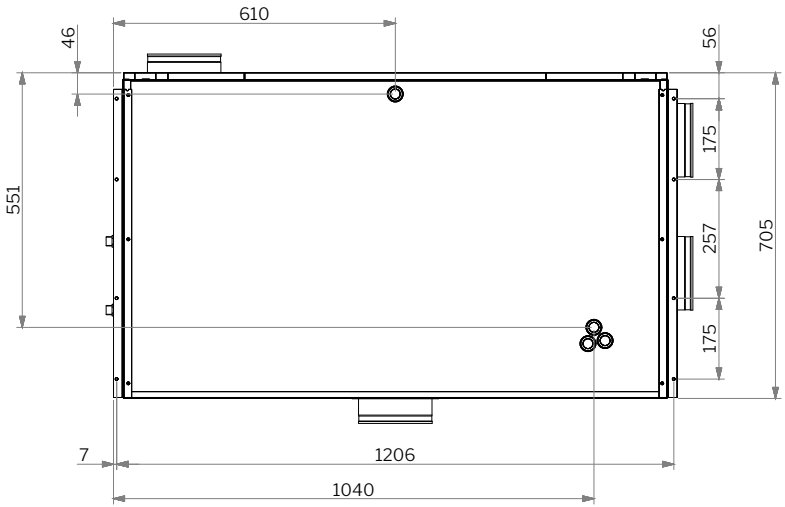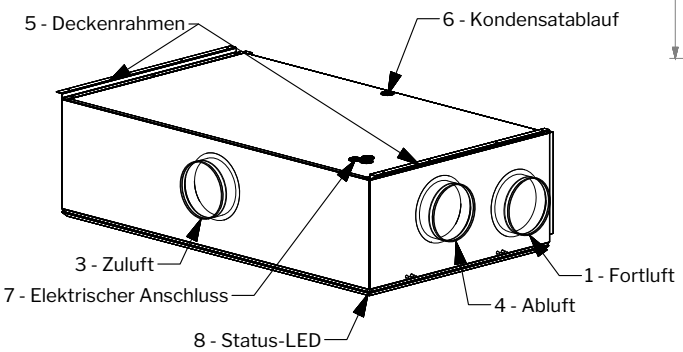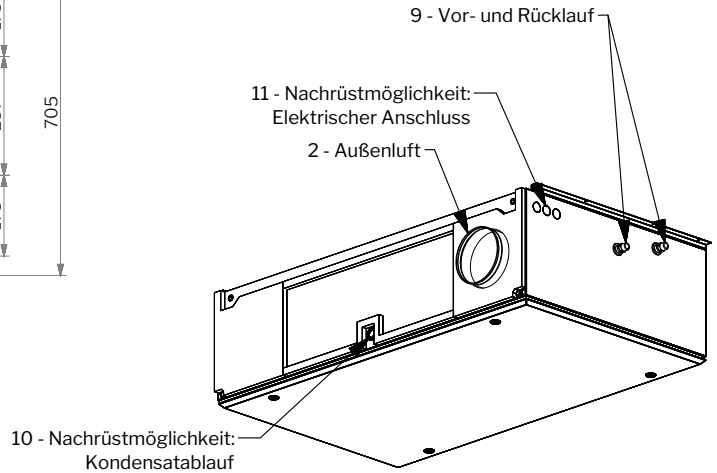
A