DV 300 HSDIDE - CF
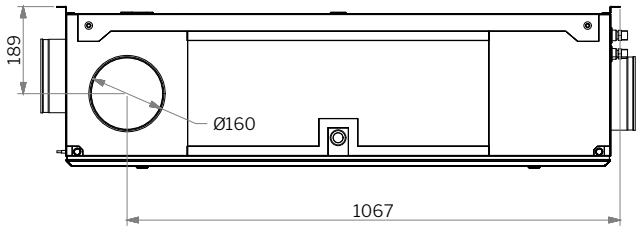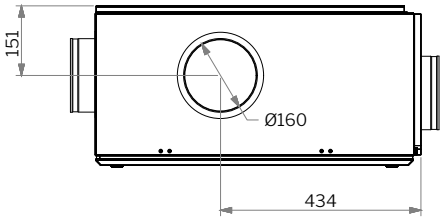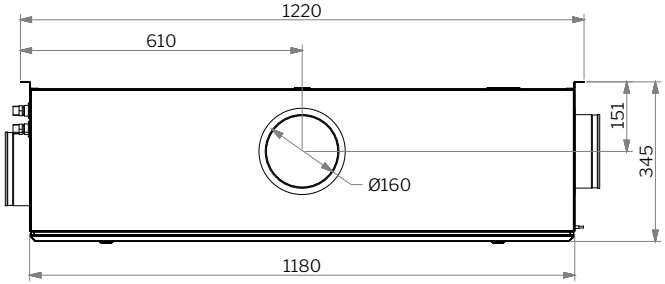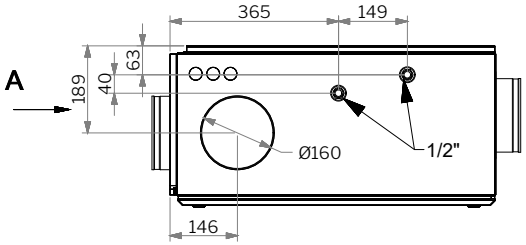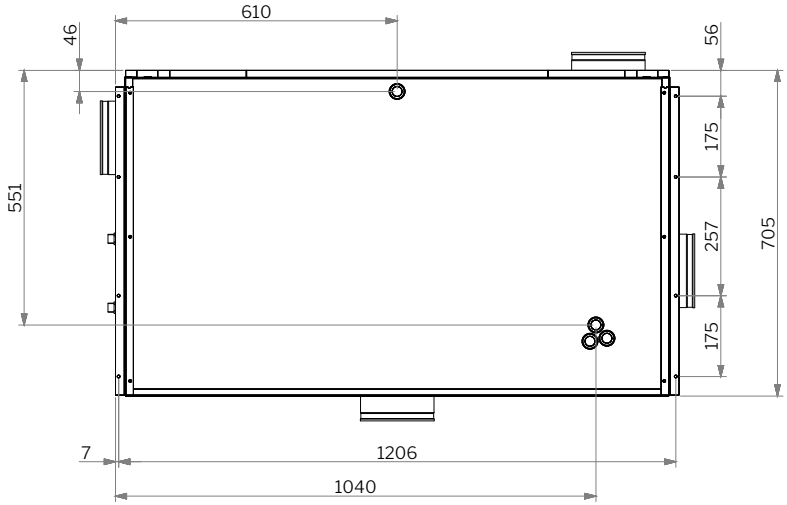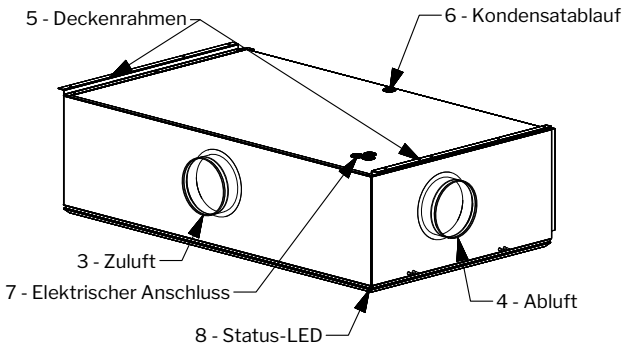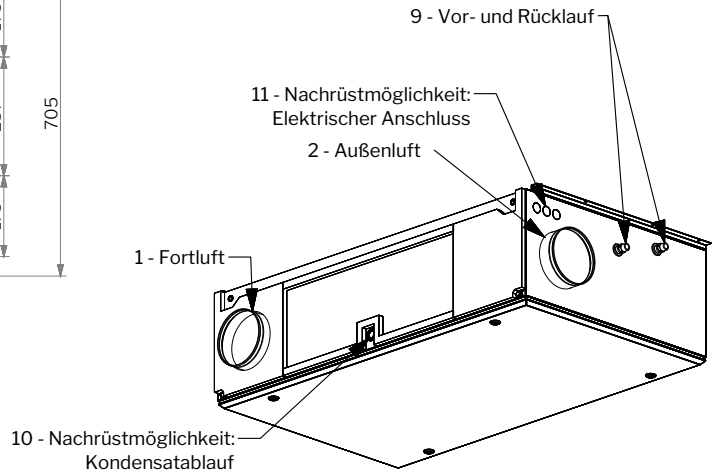
A