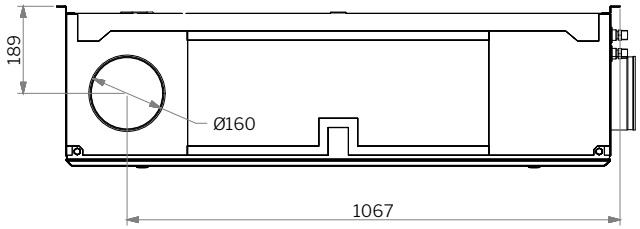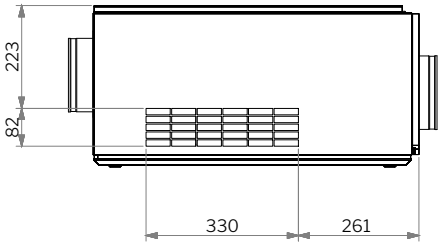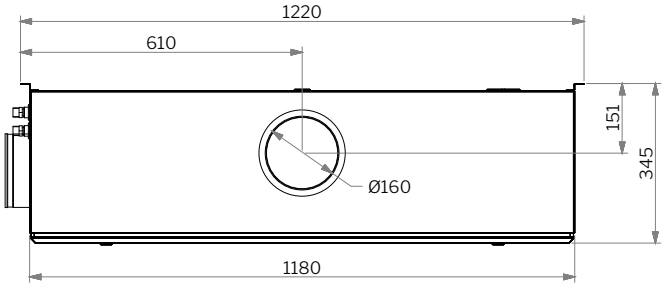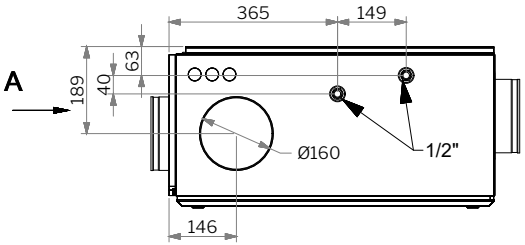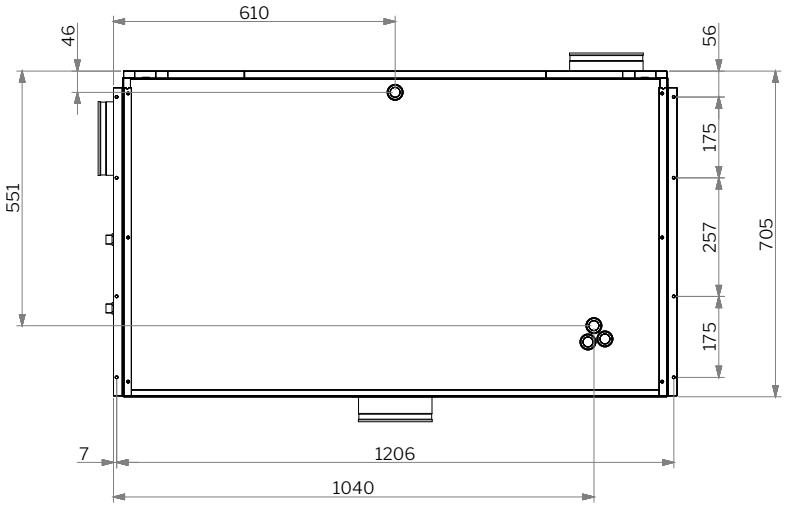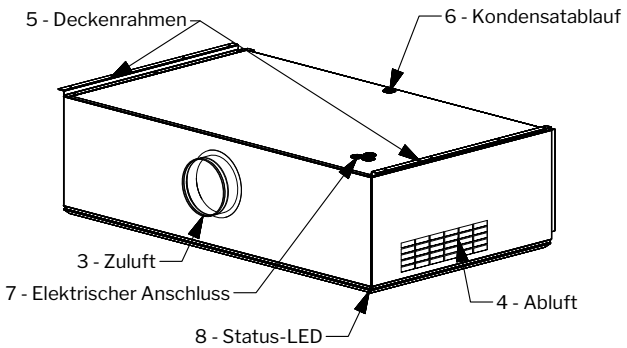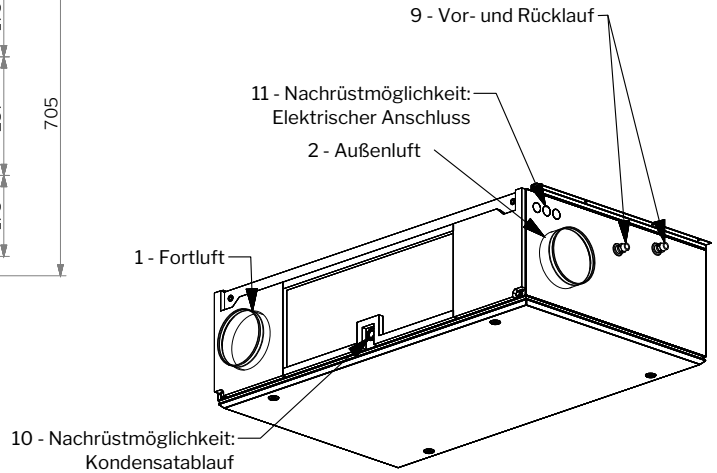DV 300 HSDIB- CF