DV 150 HDIDE- CF
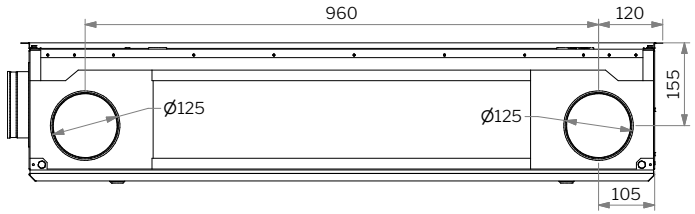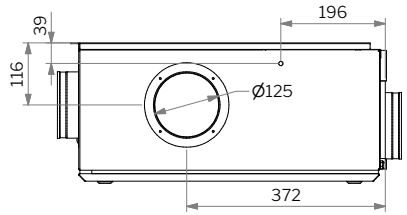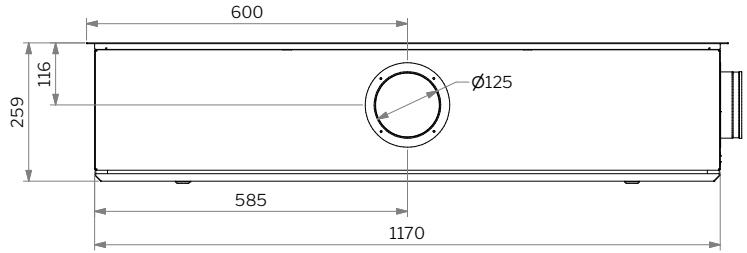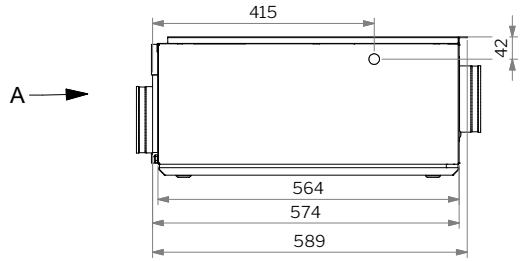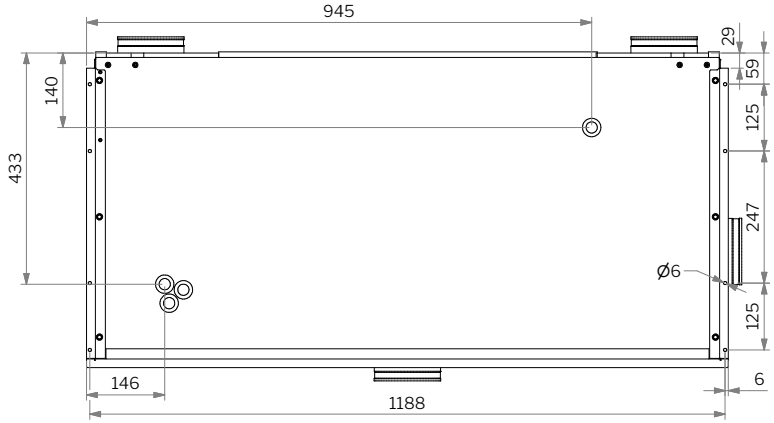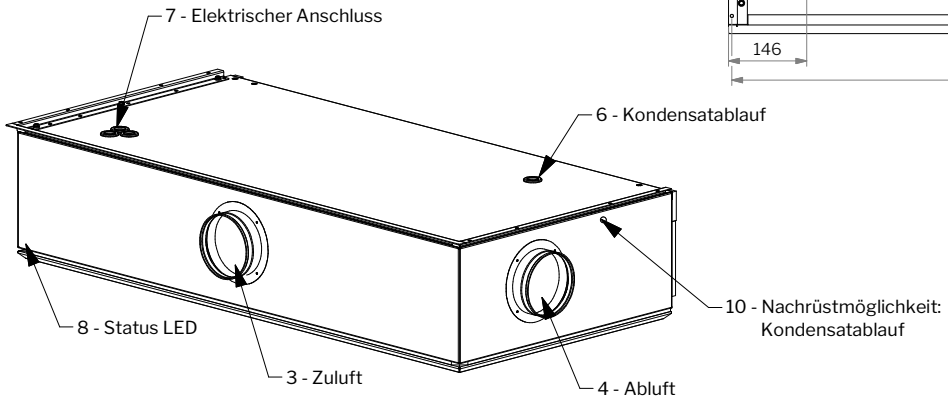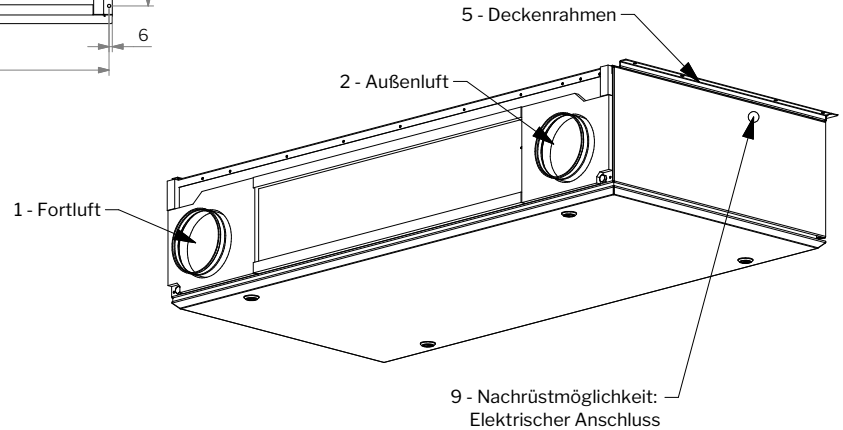
A