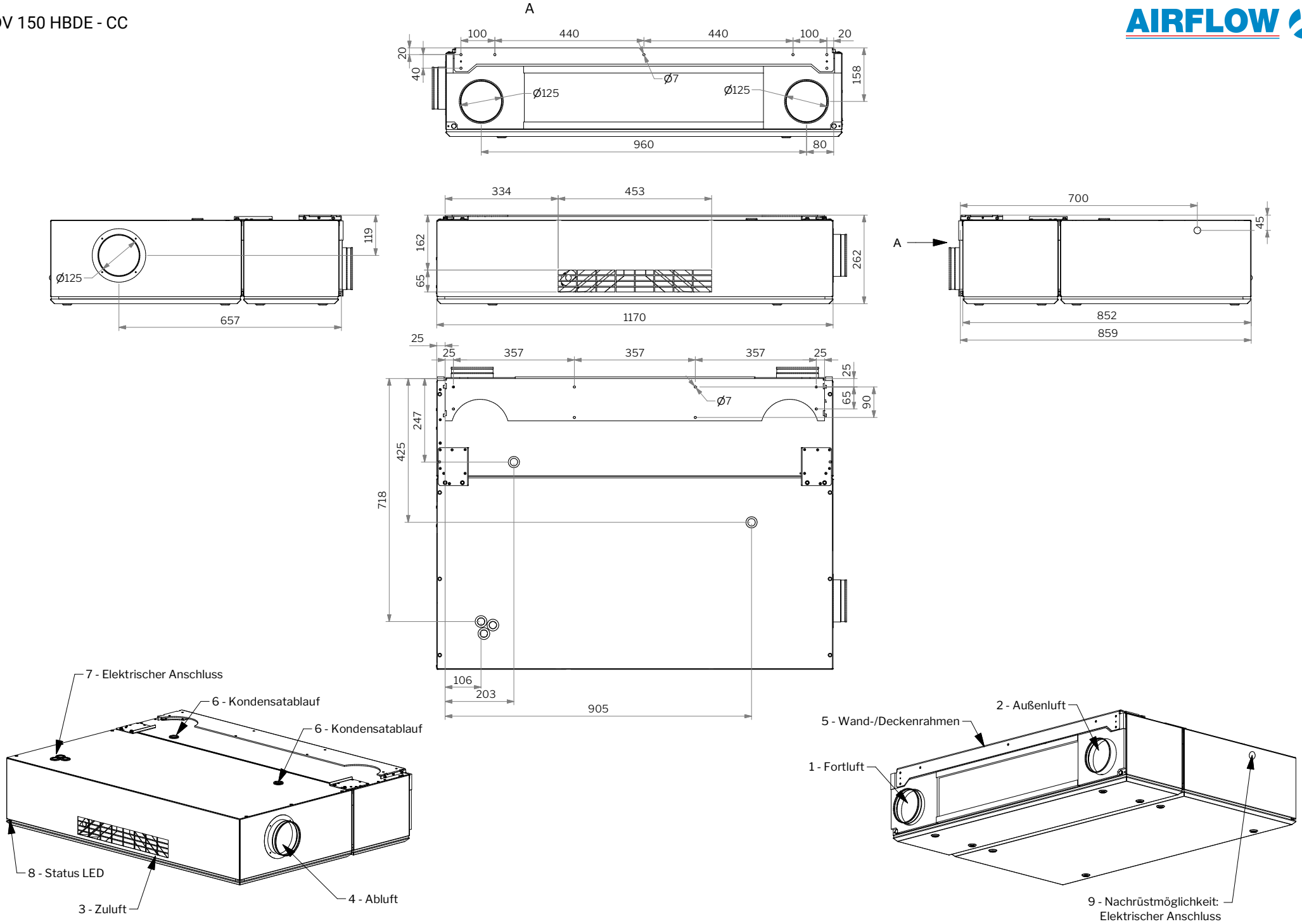DV 150 HBDE - CC